THE WOODWORKER

The Charles H. Hayward Years: 1939-1967

WOODWORKER

TOOLS & TECHNIQUES:
GENERAL TECHNIQUES

Chart titles are in italic.

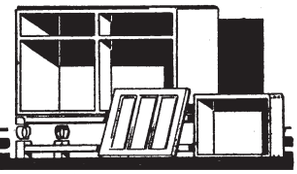

TOOLS & TECHNIQUES:
GENERAL TECHNIQUES

Chart titles are in italic.

WOODWORKER

TOOLS & TECHNIQUES:
GENERAL TECHNIQUES

Chart titles are in italic.

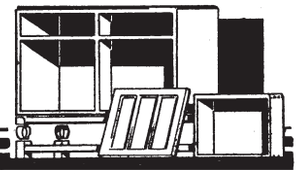

TOOLS & TECHNIQUES:
GENERAL TECHNIQUES

Chart titles are in italic.

WOODWORKER

TOOLS & TECHNIQUES:
GENERAL TECHNIQUES

Chart titles are in italic.

TOOLS & TECHNIQUES:
GENERAL TECHNIQUES

Chart titles are in italic.

WOODWORK FOR THE BEGINNER

by J. MAYNARD
Senior Lecturer in Handicraft, Shoreditch Training College

THIS article on elementary woodwork has been written to help the enthusiastic amateur who, knowing little about the craft, wishes to build on firm foundations and is willing to equip himself at a reasonable cost, with a sound basic kit of tools which, with careful use and maintenance, will last him for many years.

It is penny wise and pound foolish to buy cheap tools, and the potential craftsman is strongly recommended to seek the advice of a reputable tool stockist, and to buy the best that he can afford.

The tools in the kit shown in Fig. 1 are listed below and are grouped according to use. As a rough guide a good tenon saw will cost about 30s., a steel smoothing plane (2⅜ in. blade) 50s., and a bevel-edged chisel, ½ in., 8s. Some of the tools listed vary in detail and the buyer should know exactly what he requires before making a purchase.

Saws. Handsaws are known by their length and the number of points per inch. A useful size is about 24 in. long with 7 or 8 points per inch. (8 points equals 7 teeth. See Fig. 2.) The number of points is stamped on the heel of the blade as shown in Fig. 3. A good saw will have a skew back and the blade will be taper ground. That is to say the blade is thinnest farthest from the teeth so that it does not bind in use. The handle will be securely fixed by at least four screws which may be tightened if they become loose after a period of time.

The tenon or backsaw also varies in length and has 14-16 points to the inch. The blade is strengthened by a brass or steel back and the handle is secured by two brass screws. A useful size is 10 in. long. The teeth of hand and tenon saws should be protected when not in use by a simple saw guard and held in position by

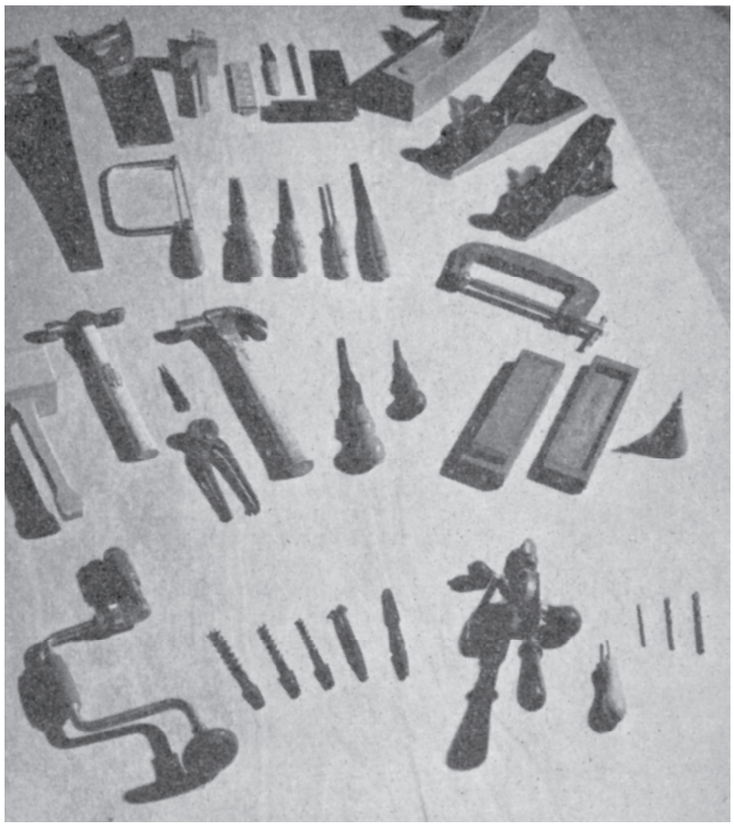

FIG. 1. TOOLS RECOMMENDED BY THE AUTHOR
These tools may be regarded as a nucleus, additions being made as the necessity arises.

USE	TOOL
Reduction of timber to approximate size	Handsaw. Tenon or back saw. Coping saw.
Marking to size	Rule. Pencil. Knife. Try square. Marking gauge.
Finishing to size	Jackplane (steel). Jackplane (wooden). Smoothing plane (steel).
Removal of waste	Chisels, firmer or bevel edged (¼, ½, ¾ in.). Mortise chisel (¼ in.).
Production of holes	Bradawl. Hand drill. Jobbers' drills (⅛, 3/16, ¼ in.). Brace. Jenning's dowel bits (¼, ⅜, ½ in.). Rose countersink. Turnscrew bit.
Fixing and miscellaneous	Hammer, Warrington type. Hammer, adze claw. Screwdriver (small). Screwdriver (medium). Pincers. Nail set. G cramp. Glue brush.
Sharpening	Oilstone, India, medium. Oil-can, conical.

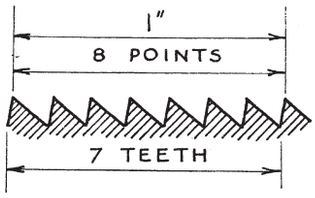

FIG. 2. TOOTH SIZE

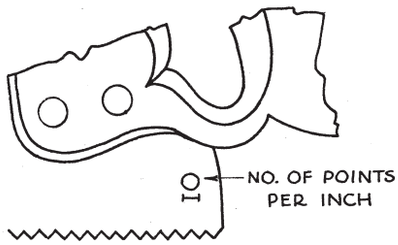

FIG. 3. WHERE TO FIND TOOTH SIZE

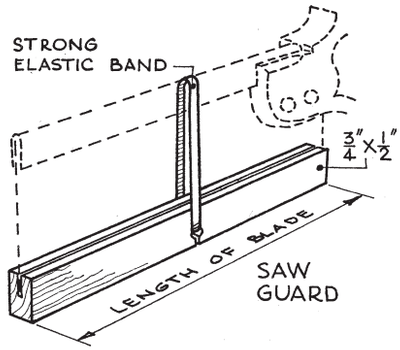

FIG. 4. TOOTH PROTECTOR

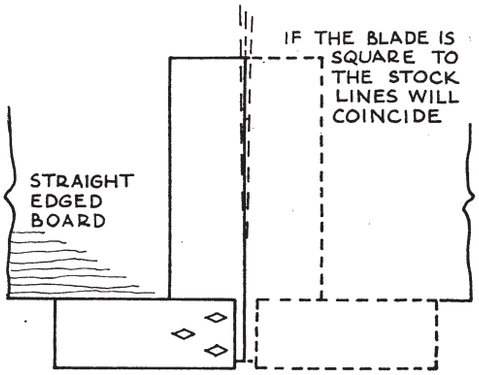

FIG. 5. TESTING ACCURACY OF SQUARE

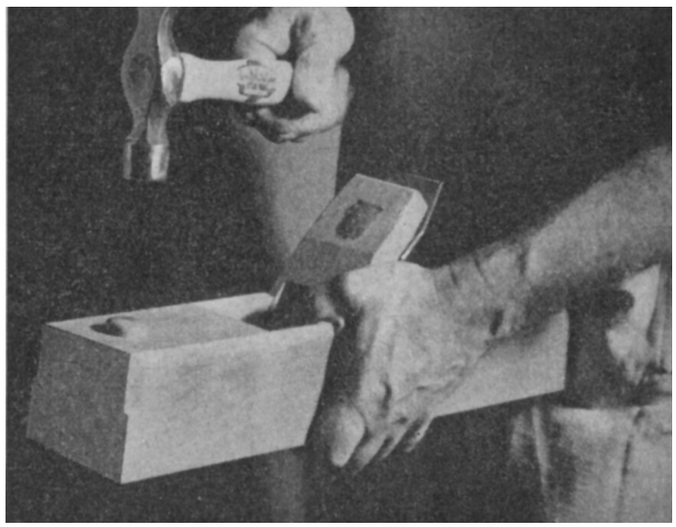

FIG. 6. *(right)* REMOVING CUTTER FROM WOODPLANE

a strong elastic band as shown in Fig. 4.

Marking and Testing Tools. The size of a try square is determined by the length of the blade and one 6 to 7 in. long will prove to be a useful size. The stock, which is often brass faced, must be held securely to the blade and at right angles to it. The squareness of the blade to the stock is all important and may be tested as shown in Fig. 5. The rule shown is a boxwood four-fold pattern 2 ft. long and should be clearly marked and rigid when extended.

Planes. Two jackplanes are shown, one steel and the other wood, and it is a matter of personal choice which is selected. The beginner will probably find that the smoother plane described later will deal with most problems in the early stages, and therefore will not go to the expense of providing a second plane until the work demands it. The steel plane, 15 in. long with a 2⅜ in. cutting iron, is easy to adjust and maintain. The wooden jackplane is measured by its length and width of cutting iron. A useful size is 17 in. long with a 2¼ in. iron. A boxwood striking knob let into the nose of the plane 1¼ in. from the front prevents damage when removing the cutter. The photograph (Fig. 6) shows the position of the plane against the body when removing the cutter. Note the position of the thumb of the left hand which prevents the iron jumping out of the escapement.

The steel smoothing plane is catalogued according to its length and width of the cutting iron, and two sizes are in common use. They are 9¾ in. long with a 2 in. iron, and 10 in. long with a 2⅜ in. iron. The latter is heavier and with its larger sole is often found to be better when cleaning off frames and more difficult surfaces. The cut of steel planes is easily adjusted by a thumbscrew located in front of the handle.

The size of the mouth can also be adjusted by moving the bed or frog on which the cutter rests, backwards or forwards, to increase or decrease the width of the opening in the sole through which the cutting iron projects. Closing up the mouth is particularly useful when dealing with curly grained stuff as it prevents undue splitting in front of the cutting edge. When buying any plane remove the cutter, take off the back or cap iron, and test for flatness of the back face of the cutting iron just behind the cutting edge. A keen edge cannot be obtained unless the iron is reasonably flat near the cutting end. (See Fig. 7.) Plane cutting irons are ground to approximately 25 degrees, but they are not ready for use and have to be sharpened first.

Chisels. Chisels are classified by the width and cross section of the blade, and the type of handle used. Those with a rectangular sectioned blade are known

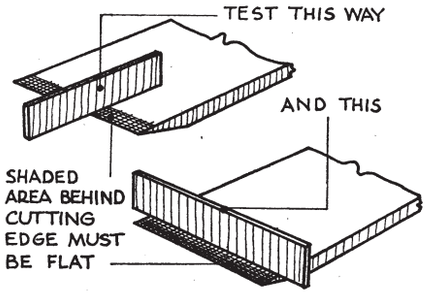

FIG. 7. TESTING FLATNESS OF CUTTER

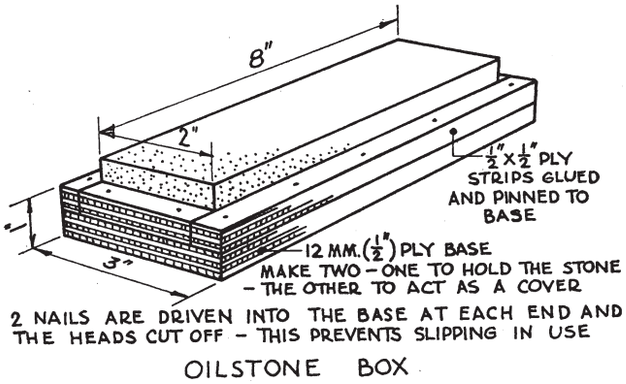

FIG. 8. EASILY-MADE BOX FOR OILSTONE

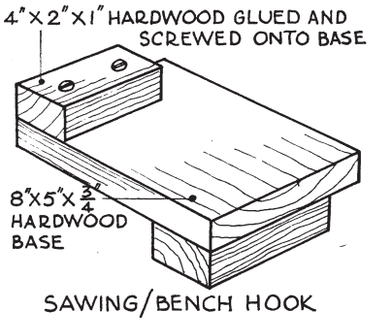

FIG. 9. BENCH HOOK, AN ITEM WHICH SHOULD BE MADE EARLY ON

as "firmer", and those bevelled along their sides as "bevel edged". The former are somewhat stronger, but the latter are quite strong if used carefully, and in certain situations, such as removing waste from dovetail sockets, are more useful than the firmer type. Once again test for flatness on the back of the chisel behind the cutting edge. Normally handles are made of ash or beech. The former is more resilient and stands up to hard wear.

The chisel used for chopping mortises has a strong blade to withstand levering action, and the type illustrated is known as a sash mortise chisel. Check for alignment between the blade and the handle, and that the former is true and not twisted in its length.

Boring Tools. The steel twist drills shown are "Jobbers'" series, and are made of carbon or high speed steel. The latter are more expensive but may be used for drilling harder materials, and the cutting edges last longer than their carbon steel counterparts.

The carpenter's brace is made with either a plain or ratchet action, and the size is determined by the sweep of the cranked handle. 8 or 10 in. sweeps are the normal sizes used. The ratchet action is particularly useful when working in confined spaces, and also when inserting screws with a turnscrew bit. There is a wide range of bits which can be used in the brace, but for a start the Jenning's pattern dowel bits, 5 in. long over-all, will be found to be most useful and give accurate diameter holes needed for dowelling. A 3/8 or 1/2 in. rosehead countersink will produce clean countersunk holes for screwheads, and a 5/16 in. turnscrew bit will be suitable for the slots in the more commonly used size of screw.

Hammers and Screwdrivers. One of the hammers shown is the joiner's hammer, Warrington pattern, size No. 2 (12 oz. head). The other is an adze eye claw hammer, size No. 2 (16 oz. head), and is very useful for outside work and removing nails from timber.

Mallets made of beech are listed according to the distance between the striking faces of the head. A 4 1/2 in. head is recommended.

Two beech-handled screwdrivers will be required for dealing with screws used in the general run of work. The size is determined by the length of the blade and a 4 and 6 in. are required. It should be noted that the working end of the screwdriver must fit snugly into the slot in the screw head in order to function properly, and there must be no tendency for the blade to ride out of the slot thereby damaging it and impairing the effectiveness of the turning action.

Cramp. A 6 in. G cramp is most useful for holding work firmly onto the bench top, and should have a drop-forged steel frame and a swivel shoe which adapts itself to any angle of grip.

Those tools which are left in their natural state, such as the wooden jackplane, the mallet and marking gauge, should be wiped over regularly with raw or boiled linseed oil, thus helping to preserve the wood and seal it off against undue atmospheric changes.

All edge-cutting tools will need regular sharpening and an India benchstone, No. 0, 8 in. by 2 in. by 1 in. medium cut, will meet all general requirements. This must be used in conjunction with a thin non-oxidising oil which acts as a lubricant, floats the steel particles away from the cutting edge, and prevents clogging of the stone's surface. A simple box to house the stone so that it can be used readily and kept clean after use is shown in Fig. 8.

A bench hook used as an aid to sawing is given in Fig. 9.

Sharpening Cutting Tools. The ability to sharpen and keep sharp the cutting edges of tools cannot be overemphasised. Sharpening must be done as often as necessary, and some timbers are so demanding on the cutting edge that re-sharpening needs to be done

every few minutes. This needs self-discipline on the part of the worker, but those who have enjoyed using really 'keen' tools never begrudge the time spent on sharpening, and know that good results are dependent on the tool doing exactly what the worker requires of it. The sharper the tool the less energy is expended, and the work produced is of a high standard.

Cutting tools are ground at 20 to 25 degrees, and sharpened at about 5 degrees more than the grinding angle. Maintenance of the same angle throughout the sharpening process is all important. Adopt a comfortable position with the left foot forward and the body bent over the stone, holding the tool with its grinding bevel resting on the oil covered surface of the stone. Now raise it approximately 5 degrees (see Fig. 10) and move it steadily backwards and forwards, restricting the movement to the arms only. The body must not move.

With a plane iron the cutting edge should be placed on the stone so that the whole of the edge is in contact with it. The rhythmic rubbing action is continued until a burr is felt along the cutting edge. The profile of the plane iron is also important and Fig. 11 shows the difference between the jack and smoothing plane irons. It will be noticed that the jackplane iron is slightly convex and the other is much flatter. In both cases the corners are taken off on the stone so that there is no danger of their producing grooves on the surface of the wood. The convex shape may be obtained by alternating the pressure when sharpening, first on the right side for a few strokes and then on the left. This is continued until the desired effect is obtained. If the stone becomes hollow through wear it will automatically produce a convex profile on the cutting edge.

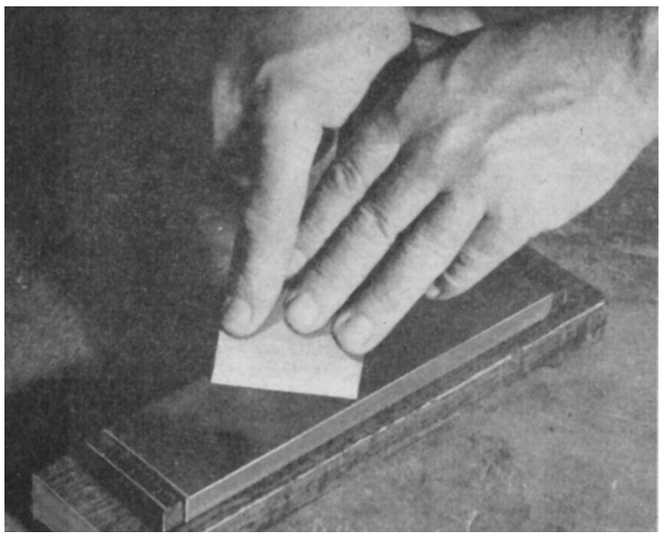

FIG. 10. SHARPENING CUTTER OF PLANE

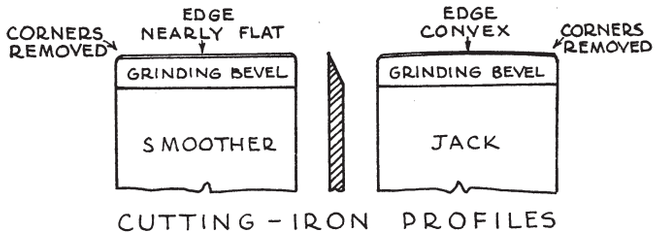

FIG. 11. SHAPE OF CUTTING EDGE

When the burr referred to above is produced the blade is turned over, laid flat on the stone at right angles to it, pressed firmly down with the fingers of the left hand, and moved backwards and forwards along the length of the stone with the right. It will be remembered that the back of the blade must be flat behind the cutting edge, and with new tools considerable time might have to be spent obtaining a flat surface. In so doing the burr will have been pushed over onto the other side.

The blade is now turned over, rested on its grinding angle, raised to the sharpening angle, and moved up and down the stone as before but with less pressure. After a few strokes it is turned over and rubbed flat on its back. This process of rubbing alternately on the sharpening bevel and on the back is continued until the burr produced is small and ready to fall off. The blade is then stropped on a piece of leather glued onto a flat board, oil being used as a lubricant. In this process the iron is drawn towards the operator alternately on the sharpening bevel and flat on its back.

The iron is now ready for use. A sharp edge reflects no light, a dull one will show up as a white line. After sharpening the plane iron, the cap or back iron is replaced and screwed tightly in position about 1/16 in. back from the cutting edge. It is essential that the cap iron fits snugly onto the cutting iron and there must be no gap between it and the back of the cutting edge.

In principle chisels are sharpened in exactly the same way as plane irons. Being smaller they are somewhat easier to handle and the beginner would be well advised to try out the sharpening techniques described on chisels before attempting the more difficult plane irons.

Before putting planes away after use always retract the cutting edge beyond the level of the sole. Chisels should be suspended in a suitable rack or carefully wrapped in baize or similar material.

The reduction of a piece of wood to size by planing is a common task for the woodworker, and the skilled craftsman does it quickly and without undue effort. The beginner finds planing difficult, and will require much practice before acquiring any worth-while degree of proficiency. There are, however, certain "do's and don'ts" which the learner should know something about, and it might help if we were to watch the craftsman at work and carefully analyse his methods.

Setting the Plane. First of all he sharpens his plane so that it will cut efficiently, and then sets it so that a small amount of cutting iron shows as a thin black line through the mouth of the sole. This cutting edge can be seen quite easily by looking down the sole from the toe (front) to the heel (back) against a piece of white paper, or better still a patch of white paint in a convenient position on the bench top. He then lays the plane down on its side ready for use, never on the sole for fear of damaging the keen cutting edge.

Now let us look at the bench surface on which the wood will rest. Normally it has an adjustable stop which can be raised or lowered to accommodate varying thicknesses of wood. The bench top is thick enough to resist bending under downward pressure and has adequate support underneath.

The craftsman now looks critically at the piece of wood which has to be planed, selects a side, and places it uppermost against the bench stop. What factors influence his choice? He probably selects what he considers to be the better face which would eventually become the "face" or datum side, and positions it so that he will be planing "with the grain". He also looks at the edge of the wood to see whether the grain runs uphill and away from him so that when he planes he shaves off the ends of the bundles of fibres from which the wood is made, leaving a clean and smooth surface. It is not always easy to determine the direction of the grain, but when in doubt it is advisable to try it one way and then the other, and choose the way which gives the better finish.

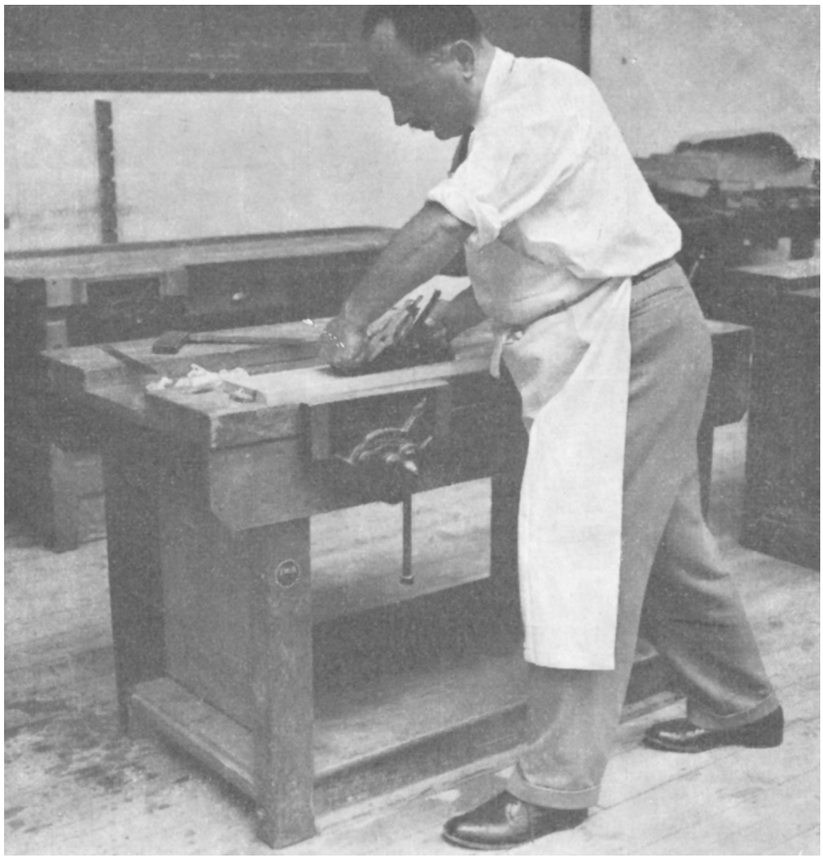

FIG. 12. PLANING A FLAT SURFACE SHOWING THE CORRECT STANCE
Note that the craftsman stands behind the work, and never planes across the body. See also Fig. 13

FIG. 13. ANOTHER VIEW OF PLANING SHOWING POSITION OF LEFT HAND

Stance for Planing. At the bench our expert looks comfortable and at ease (see Figs. 12 and 13). He stands behind the work with his left foot forward and knee bent. His right thigh is tucked in tightly against the bench side, and he pivots

about his ankles on the forward stroke. He holds the plane handle firmly with the right hand, the index finger of which rests along the side of the cutting action. His shoulders face forward, with the head roughly over the plane, and the left arm leading down to the knob which is gripped as shown in Fig. 13.

In action he pushes the plane forward along the wood using considerable downward pressure. At the beginning of the stroke the pressure is concentrated on the front of the plane, but when the entire sole is on the wood the pressure is distributed equally fore and aft. At the end of the stroke all the pressure is transferred to the back of the plane (Fig. 14).

This transference of pressure is not obvious to the casual observer, but is absolutely necessary if the wood is to be finished flat along its length. Notice also how our craftsman works across the width of the board, moving the latter when necessary so that the part being planed is directly behind the bench stop.

Testing for Truth. As the object of planing is to produce a flat surface it is checked regularly to see whether that aim is being achieved. Notice how the wood is held up to the light and tested in three ways with a straight-edge, first across its width in several places, then along its length, and finally along both diagonals. High spots can be seen easily, and are marked with a soft pencil and then removed by localised planing. Thus our expert systematically works over the surface of the wood until it is flat and true, and finally when he is satisfied will put on it a "face" mark using a soft pencil. At all times planing is a deliberate action on the part of the worker, following a prescribed pattern.

Sometimes the piece of wood to be planed will not sit down on the bench fairly and squarely because it is twisted or hollow in its length, and then the high spots on the lower side are marked and removed by planing before work on the upper surface begins.

Planing the Edges. Normally the next job is to plane an edge straight, true, and square to the surface already treated (Fig. 15). If the board is narrow and fairly thick it can be done with one edge resting on the surface of the bench, but if it is narrow and more than 3 in. wide it is better to hold it in the vice horizontally with the grain running in the right direction. In order to "feel" the sole of the plane on this narrow surface the left hand is positioned as shown with the thumb in front of the knob and the first finger running along the side of the wood.

Again the pressures are controlled, and the forward action is deliberate and firm, the sole of the tool being kept in a horizontal plane. It is important at this juncture to see that the vice cheeks are vertical, otherwise the plane,

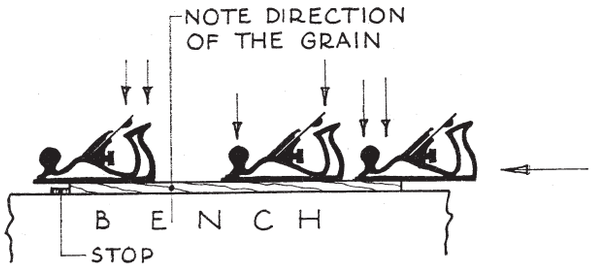

FIG. 14. DISTRIBUTION OF PRESSURE WHEN PLANING

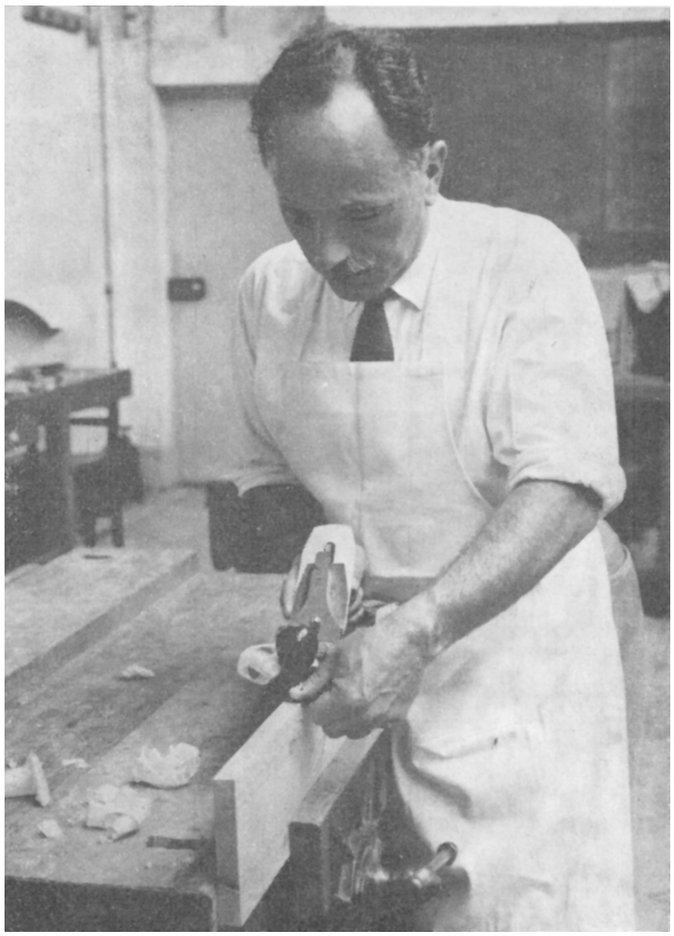

FIG. 15. HOW PLANE IS HELD WHEN SHOOTING AN EDGE. NOTE HOW FINGERS OF LEFT HAND CURL BENEATH THE SOLE

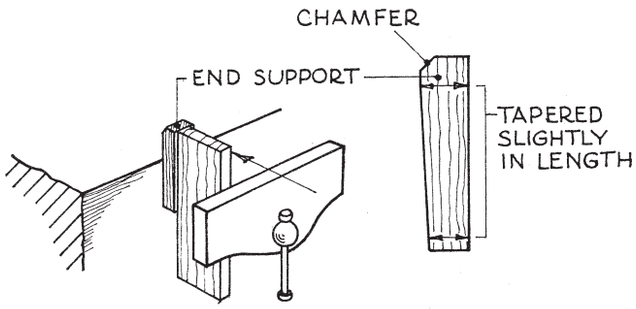

FIG. 16. PLANING END OF A NARROW BOARD

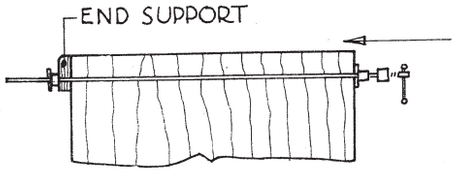

FIG. 17. PLANING END GRAIN OF WIDE BOARD

held in what is thought to be the correct position, will not produce a surface at right angles to the side already planed. The edge is tested for straightness in its length and squareness with the face side. When this has been accomplished it is marked with a "face edge" mark, the apex of the "V" lining up with the tail of the face mark.

When a number of pieces of wood of similar size have to be prepared it is better and more economical in effort to plane all the "face" sides, then all the "face" edges. The first of each can be used as a master face or edge to test the rest.

It is suggested that the beginner should try planing edges before attempting the more difficult larger surfaces. To summarize:

1. Keep the plane sharp.
2. Work on a firm, flat surface.
3. Plane *with* the grain.
4. Stand behind the work—never plane across the body.
5. Test the work frequently.

End Grain. Planing end grain presents a particular problem, especially if the board is narrow in its width. Unless special care is taken splitting will occur at the farther end of the wood. This can be avoided if the wood is supported as shown in Fig. 16. Note how the wood is held vertically in the vice. The supporting end block should be slightly tapered in its length to ensure close contact at the upper end, and should be only slightly thicker than the piece of wood being planed. A wide support would offer far too much resistance to the plane's cutting edge, with consequent damage to the surface of the wood being planed. The back edge of the block is chamfered to prevent splitting when the plane runs through at the end of the stroke.

If the board is wide it can be planed from both ends or a block can be clamped against one end as shown in Fig. 17.

THE TECHNIQUE OF WOODWORK

Methods of construction and, to an extent design, have in the past been largely founded upon the practical working of wood with hand tools. This is borne out by the changes in method which have taken place in recent years as a result of the use of machinery which admits or requires an entirely different technique

THE practical working of wood is largely based upon an extraordinarily simple fact; a fact which every man who goes in for woodwork, even in an elementary way, soon comes to discover for himself. This is that it is easier to take a tool right through than to stop it short—at any rate so far as hand tools are concerned. Men in the past found this out at a very early period, and traditional methods of construction have been based on and developed around this simple truth, but it is rediscovered daily by every man who picks up saw, plane, file, and so on.

Consider the number of times you experience this; how much easier it is to work a through groove than a stopped one; how simple it is to take a saw right across a piece of wood, but what a different proposition when it has to be stopped short as when sawing the sides of a stopped groove; how straightforward it is to plane an edge straight, yet what a nuisance it becomes when it is stopped at one (or both) ends and you cannot use the plane except at the middle (haven't you been tempted to plane the edge straight and plant on the stops afterwards!); how a simple chamfer can be formed with the plane in a few seconds, but takes probably ten times as long when it is stopped; and so the list might be continued. These points are brought out in Fig. 1.

Of course, it does not follow from this that grooves are never stopped or that chamfers always go right through. Sometimes you cannot help yourself;

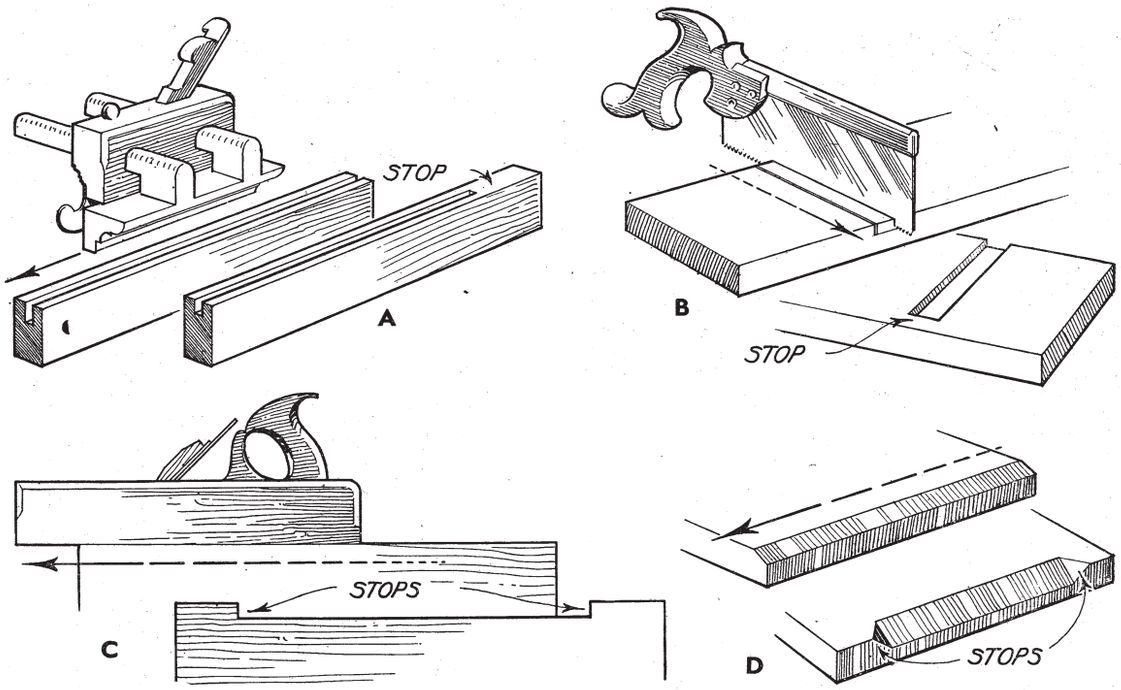

FIG. 1. TYPICAL OPERATIONS SHOWING THE ADVANTAGES OF TAKING THE TOOL RIGHT THROUGH
A. Through groove worked with plough and stopped groove. B. Trenching taken right across and stopped trench. C. Use of plane on straight edge and edge with stops. D. Plain chamfer and one with stops

possibly the one may be a constructional necessity, or the other so attractive a feature that it is worth the trouble involved. But there is no point in work for its own sake; it is much better to go about things in a simple way, especially when the involved method carries with it no corresponding advantage.

It is because of this that it is generally easy to tell whether a design is the work of a practical man; or, to take another aspect of the same thing, why a design by an artist invariably requires the co-operation of an experienced woodworker to convert it into terms of practical working. A simple example came to our notice recently. The sides of a drawer had to be grooved to fit suspension runners attached to the cabinet sides. They were shown stopped at the front as at A, Fig. 2. Surely no practical man would ever have given such a detail to be worked by hand when it would have been just as easy to arrange things as at C in which the plough could be taken right through before assembling the drawer. In fact the arrangement at B could have been followed, so enabling the runner to afford support almost to the extreme front.

This running-through business is of particular interest because it is largely peculiar to wood, and it is partly due to wood being a natural material which must be used in the form in which it is found (we are ignoring here made-up materials such as laminboard, plywood, etc.). Some materials (metal, plastics, etc.) can be cast or moulded, and projections and stops present no more difficulty than flat surfaces. With timber you fell the tree, convert the log, and then think in terms of so many straight pieces of material. Another point affecting the thing is that wood is comparatively soft so that you can set a metal cutter in a stock (that is, make a plane) and take off shavings, the device having the advantage of helping to make the work straight and true. But of course you have to be able to take the tool through without hindrance.

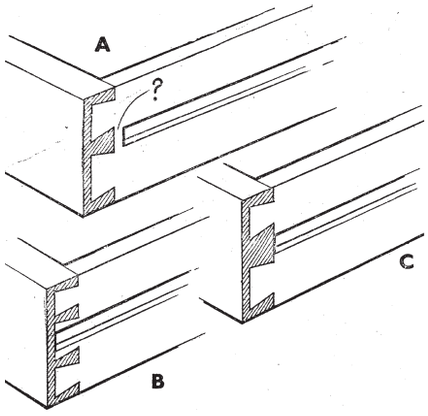

FIG. 2. DRAWER WITH SUSPENSION RUNNERS
Construction at A is faulty for hand work since plough cannot be taken right through. B and C are better

Perhaps a better appreciation of this point is to compare it with the method used by the stone mason. You cannot use a plane on stone; you have to chip it away with chisel and hammer. There is therefore no point in running through. If a mason has to work a moulding around, say, a window opening, he does not form the joint right at the mitre. Instead he

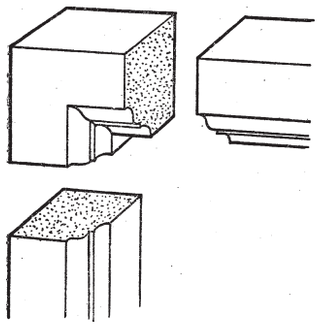

FIG. 3. HOW STONE MASON WORKS HIS MITRE IN A CORNER BLOCK OF STONE

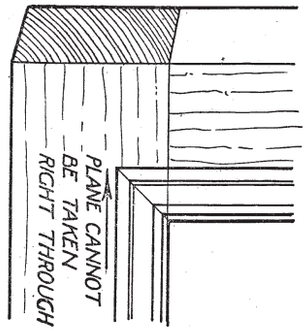

FIG. 4. MASON'S MITRE APPLIED TO WOOD

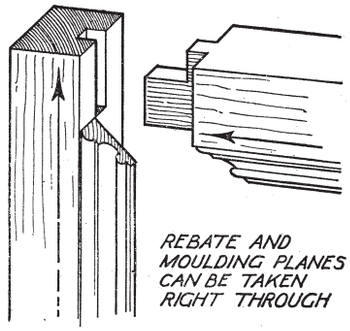

FIG. 5. NORMAL MITRE USED BY THE JOINER

carves a special corner stone as in Fig. 3, this having the two joining mouldings carved in it. Thus we see how a fundamental difference in methods of working has evolved a technique peculiar to the material, this basically affecting the design.

This brings us to an interesting point. The carver in wood uses tools and methods of working which are similar to those of the sculptor in stone. He uses gouges and chisels as distinct from the planes and ploughs of the joiner or cabinet maker. Consequently the running-through idea does not apply to him. When therefore a wood carver makes a piece of woodwork he often carves it in the solid rather than joins pieces together, and the mitres of his mouldings are like those of the mason. In fact, the same idea is occasionally carried out in joinery in which a timber framing is used. In Fig. 4, for instance, the joint in the moulding is not on the mitre line, but runs straight across in line with the shoulder of the joint. Clearly the moulding plane could not be used on the uprights, and the corner would have to be cut by the carver. This joint is, in fact, known as the mason's mitre, and the corresponding joiner's mitre is given in Fig. 5.

It is an interesting thought that if the technique of woodwork had developed through the wood carver rather than the joiner, the mason's mitre would probably have become the rule rather than the exception.

THE WAY OF THE GRAIN

SINCE direction of grain plays such an important part in woodwork it is probably worth while going into some detail on the subject.

Tearing Out of Grain. In a coarse-grained timber it is only too easy to produce deep tears with one stroke of the plane in the wrong direction, and if the wood has little to spare in thickness, one may have to make it thinner than was intended in order to plane out these tears. It is therefore useful to know beforehand, rather than by trial and error, which direction is likely to produce the better planing.

Fig. 1 shows a piece of timber which is to be planed on surface A. The grain, however, should be studied on surface B, which indicates planing in the direction of the arrow, in other words, the direction in which the grain goes uphill. Enlarged detail of the grain (on the right in Fig. 1) shows how the cutter forces up the individual wood fibres if the wrong direction is chosen. The grain may, in fact, be likened to the hair on an animal's back. If stroked the right way the hair feels smooth and tends to lie flat. If stroked the wrong way, it becomes roughened up. There are occasions, of course, when the grain is interlocked and, although sloping one way on surface B, may slope the opposite way in the middle of the wood. With wavy grain, also, the slope will often alternate throughout the length. Where these conditions occur, the only method of finding the best direction is that of trial and error in planing. Even then, tearing out of the grain may occur in patches, whichever direction is chosen, and these should be eliminated with the scraper.

Shaping with the Spokeshave. The same general principle applies in the case of the spokeshave. Fig. 2(A) shows the timber and the direction of its grain, the dotted line being the curve required, and the arrow giving the correct direction for using the spokeshave. The slope of the curve required often makes it more convenient to use the spokeshave in the wrong direction so far as grain is concerned, and it is an easy mistake to make. The enlarged detail (B) again shows how the spokeshave cutter forces up the fibres if the wrong direction is taken.

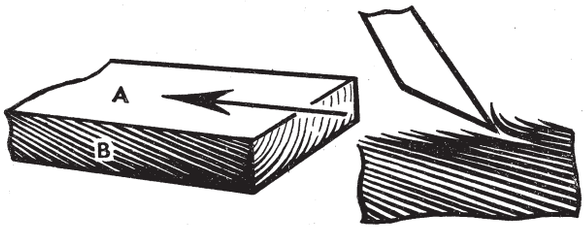

FIG. 1. PLANING WITH THE GRAIN
Although the surface A is to be planed, the slope of grain is studied on surface B, the plane then being used in the direction in which the grain goes uphill. Enlarged detail on right shows how wood fibres are torn up if planed the wrong way

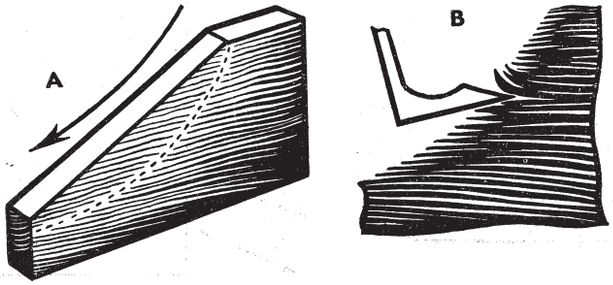

FIG. 2. SHAPING WITH THE SPOKESHAVE
(A) The line of curve in relation to the grain. (Arrow indicates direction in which spokeshave should be used.)
(B) Fibres again torn up by choosing wrong direction

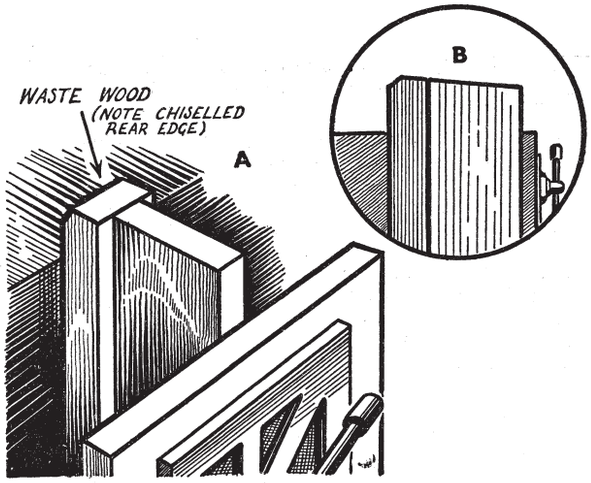

FIG. 3. SHOOTING UP ENDS IN THE VICE
(A) Waste wood placed behind end to be shot.
(B) Where waste wood is harder than timber being shot. (Plane has failed to reduce both pieces at same rate, and the end is out of square)

Shooting Ends. In planing end grain, of course, the usual precaution should be taken of placing a piece of waste wood at the far end to avoid splitting, but the application can be varied to advantage. In the case of shooting up ends in the vice (Fig. 3, A) it is better, for instance, to use waste wood of the same kind as that being planed. If the waste wood is harder than the wood being planed, the plane will not reduce them both at the same rate. The result is that, after two or three strokes, the toe of the plane is lifted slightly by the greater height of the waste wood, and the end is shot slightly out of square (Fig. 3, B). The error is, of course, only slight (unless the waste wood is particularly hard), but any method which makes for greater accuracy and ease of working is worth adopting.

Incidentally, it is advisable to chisel off the back edge of the waste wood, as shown. If this is not done, the back edge splits away instead of being planed down, and, because it does not break right off, interferes with the toe of the plane. This may again result in ends being shot out of square.

The Shooting Board. When shooting ends on the shooting board it is also worth while having a block of waste wood between the stop and the timber being shot. The two surfaces being planed together enables support to be given as far as the extreme tip of the end being shot, thus giving a cleaner edge.

Smoothing Up. In smoothing up a finished job, such as a framed construction, the difficulty of working round the corners presents itself. In coming to the end of a rail it is necessary to swing the plane round quickly in order to avoid planing across the grain on the stile.

The Slicing Action. Fig. 4 shows the movement of the plane in this case, the important point being to start a slicing action as well as a turning action as soon as the plane comes on to the stile. The plane is thus immediately travelling with the grain of the stile although the turning action may only just have started.

The ordinary bench stop is of course inadequate where the direction of planing is continually being changed, and, in the case of a very small frame, it will often go in the vice, as shown, standing just sufficiently proud to keep the plane clear of the vice. Larger jobs are usually cramped to the bench in successive positions to enable smoothing up to be completed.

Cross-grain Weakness. We all like to see the finished article with a pleasing appearance, but if this is obtained at the expense of sound construction it amounts to bad design, however pleasing to the eye. Some slight knowledge of timber structure is probably helpful in this respect. Fig. 5 shows the individual cells in a piece of timber as they would appear under a powerful microscope. They are held together by a content of lignin, but cells A, B, C, and so on *with* the grain are held together much more firmly than A is to D, B to E, etc. It is thus much easier for a break to develop between left half and right half, than between top and bottom of the timber.

Fig. 6 A gives an instance where this factor is important. Rail X has a curved lower edge which has great weakness where it joins the leg Y, the shaded portion showing the area of weakness,

which is known as " short grain." In the course of time the cross-grain weakness of the timber would almost certainly result in the tip of the shaded portion breaking off, and this is, therefore, faulty construction.

The remedy is shown at B, a recess being worked in the leg which allows for extra length of grain at the weak spot on the rail. There are, of course, numerous cases where short grain has to be avoided, but as long as the principle is understood, the remedy is a matter of common sense.

Incidentally, one of the advantages of plywood is the elimination of cross-grain weakness by arranging that the grain runs in different directions on adjacent layers. Blockboard is a similar instance, the outer layers being strengthened by individual strips of wood glued inside with their grain running at right angles to that of the outer layers.

Warping. Badly seasoned, and sometimes even well seasoned timber will warp in the course of time, and it is often quite practicable to guard against this.

Fig. 7 A shows the end view of a board and the way in which it will eventually warp, owing to the fact that timber always tends to curve outwards from the heartwood as its moisture content diminishes with time. By observing the annual rings on the end of a board, therefore, and working on the principle that these will tend to straighten out eventually, it is always possible to predict the direction of warping.

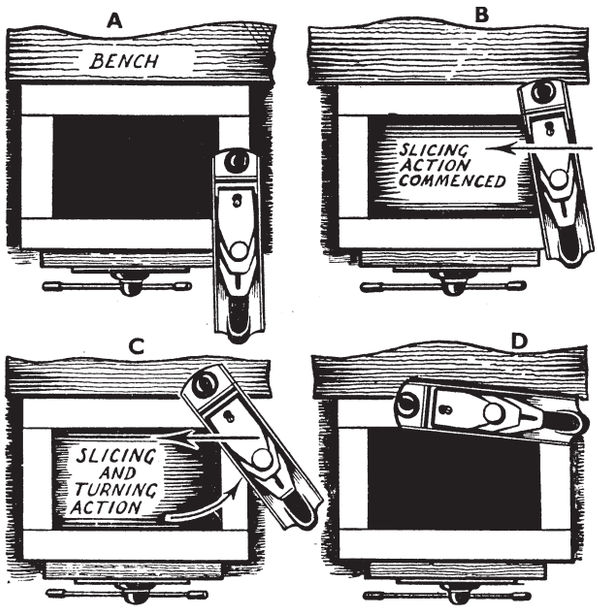

FIG. 4. SMOOTHING UP A FRAMED CONSTRUCTION
Note the slicing action combined with turning action

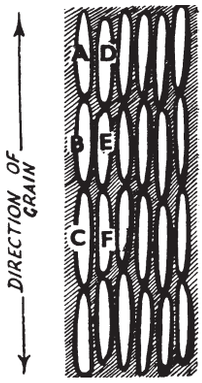

FIG. 5. THE STRUCTURE OF TIMBER
Cells are held together less strongly across the grain

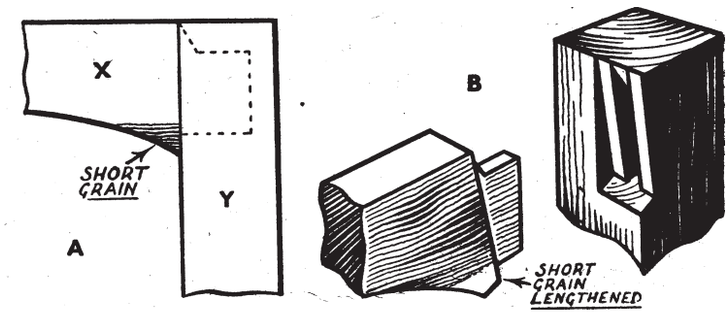

FIG. 6. THE WEAK SPOT ON A CURVED RAIL
A. Shaded portion shows weak area due to short grain
B. Special construction adopted, allowing for greater length of grain at vital point

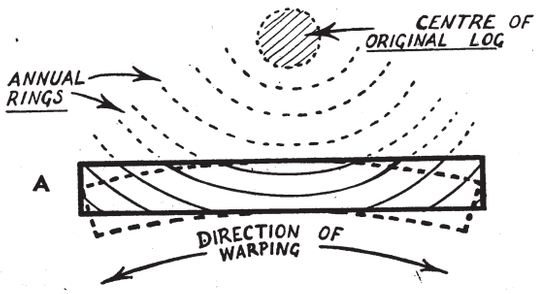

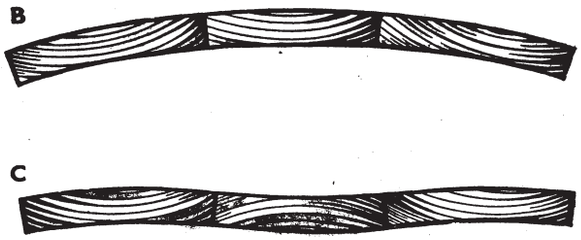

FIG. 7. WARPING: A POINT TO WATCH IN JOINTING BOARDS TOGETHER
A. The board always tends to curve away from centre of original log
B. Combined effect of boards all warping in same direction
C. The safeguard—boards are turned so that annual rings curve in opposite directions on adjacent boards

EQUIPPING YOUR WORKSHOP:
LAY-OUT OF THE WORKSHOP

IT is seldom that one is able to erect and fit up a workshop in the ideal way. What generally happens is that a room, shed, garage, or what you will has to be adapted to the purpose, and clearly it becomes a matter for compromise between what is wanted and what is available. Often the result falls far short of the ideal.

To a large extent the matter is affected by the type of work one expects to do. Large carpentry clearly needs more room than, say, small items, though as a rule all kinds of work have to be undertaken. Another matter affecting it is whether any machinery has to be installed, because, apart from more room being needed, it does require a rather different lay-out. The best plan is to see how far the desirable can be achieved with the conditions as they exist.

Small Shed. Here we assume that a garden shed of, say 9 ft. by 6 ft. is to be used as the workshop. One of the difficulties to be faced is that of dampness in winter time, and on this score we may note that a timber shed is far more effective than one of galvanized iron, as it affords much better insulation against extremes of temperature. If only galvanized iron is available it is strongly advisable to line it with one of the insulating boards such as *Celotex*. Otherwise condensation is inevitable. Lining in fact is a good plan no matter of what material the shed is made.

Fig. 1 is a suggested lay-out for such a shed. It will be seen that there is a window behind the bench, and another at the head. The latter may not be possible, but a head light is always an advantage. In some cases it is preferable to have the bench along the other long wall so that its edge is in line with the open door. Then when long boards are being worked the end can project through the open doorway. This, of course, would necessitate an alteration of the window position.

Space for a tool cupboard is allowed because it is always advisable to keep the more valuable tools shut away to reduce the chance of rust. Apart from this the working space should be kept as open as possible. Shelves to hold oddments are added as required. It is inevitable that odds and ends of timber accumulate,

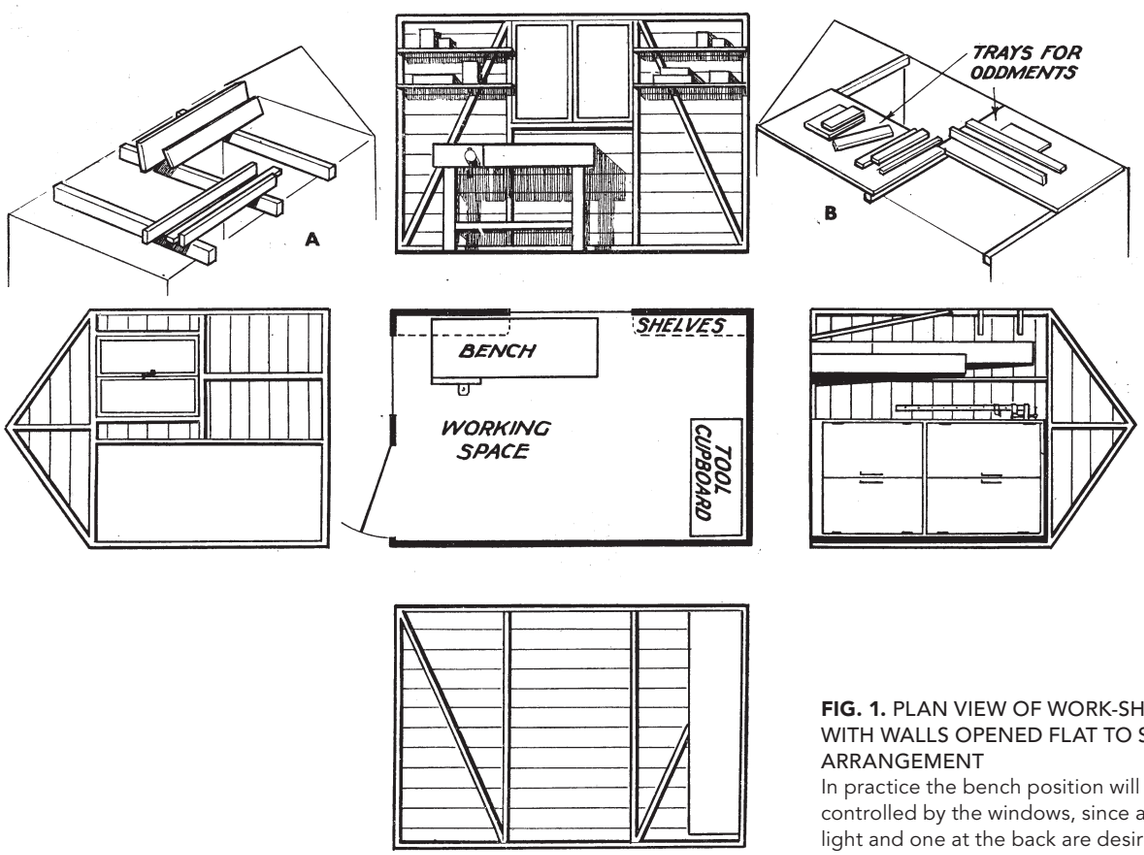

FIG. 1. PLAN VIEW OF WORK-SHED WITH WALLS OPENED FLAT TO SHOW ARRANGEMENT
In practice the bench position will be controlled by the windows, since a head light and one at the back are desirable

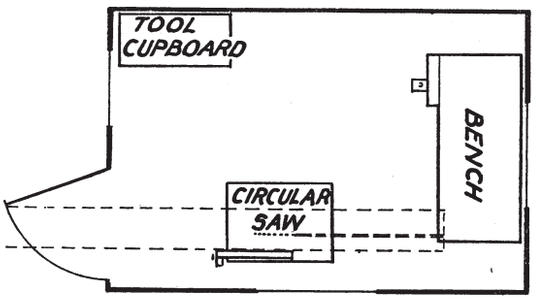

FIG. 2. WORKSHOP WITH CIRCULAR SAW

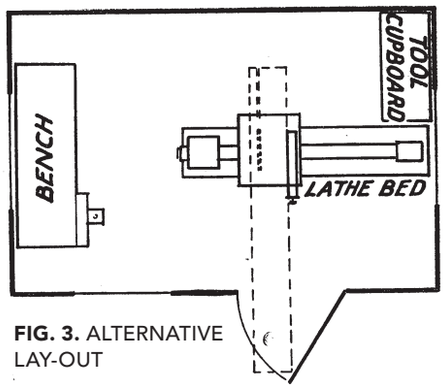

FIG. 3. ALTERNATIVE LAY-OUT

and when the shed has a span roof one of two things can be done. One is to fit a couple of tie beams on which the longer pieces of wood can rest as at (A). The other is the idea shown at (B), Fig. 1. A centre tie beam is fitted and two trays added, these being staggered to give easy access. These will hold the many small pieces of wood which are too valuable to throw away.

The position is rather different when a machine is installed. In all probability this would be either a circular saw or a lathe to which various attachments such as saw, planer, etc. can be added. In Fig. 2 the same shed is shown but with a circular saw installed. The point about a machine of this kind is that it requires to be at or near the middle of the room to enable fairly long work to be passed right across it. In this respect it always takes up valuable space, but there seems no way of avoiding it. In Fig. 2 it is placed opposite the door so that long boards can project through the doorway. If possible the saw table should be higher than the bench so that wood does not foul the latter when passed across it.

One has also to consider cross-cutting.

Here again it is desirable to keep the saw near the centre so that the maximum length can be dealt with, and on this score one has to take into account any items such as the tool cupboard which may be in the shed.

In Fig. 3 it is assumed that a lathe is installed, this having sawing and planing attachments. In some machines the wood has always to be passed across at right angles to the bed, and this again means that the lathe must be more or less central. In this plan the wood can project through the doorway as before, and when turning between centres there is ample room.

Bowl turning at the end can also be done. In addition this arrangement leaves reasonable space for work at the bench.

Some lathes have a swivel head, and this has an advantage in that wood can be passed longitudinally along the machine, enabling the latter to be placed close to a wall rather than in the centre of the shop. When a planer is installed the same general provision is necessary in that taking-off space as well as feeding space is required, but no lateral provision (as in cross-cutting) is needed.

Garage. In many ways a brick garage makes the best workshop providing that there is enough room at the back for a bench. The great advantage is that the car can always be run out, enabling large wood to be dealt with. Fig. 4 is a

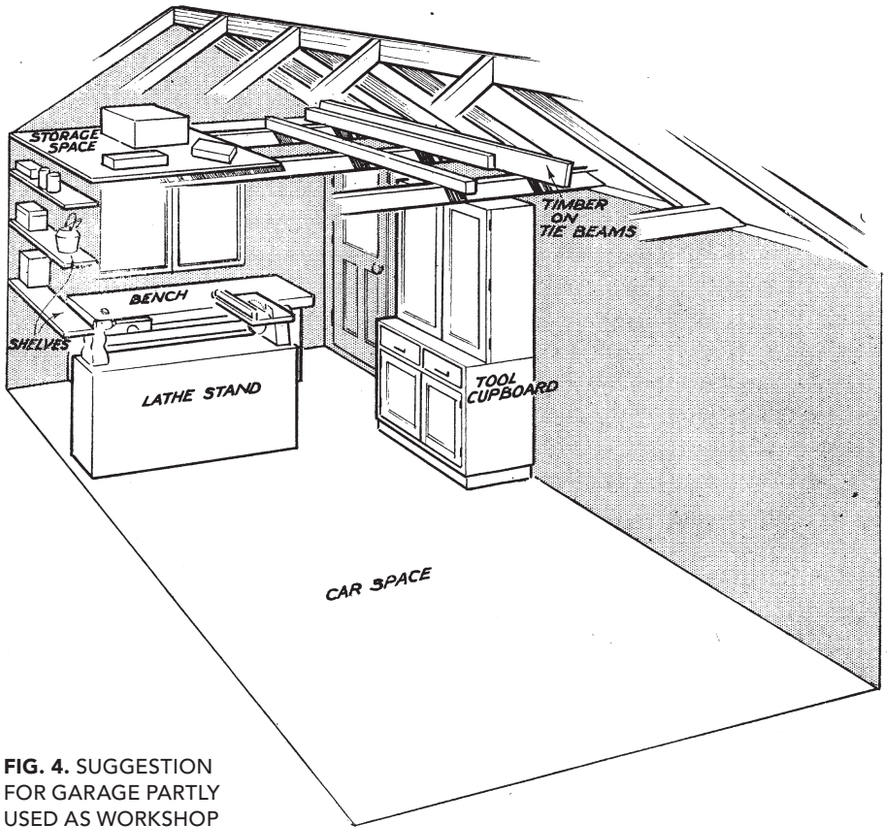

FIG. 4. SUGGESTION FOR GARAGE PARTLY USED AS WORKSHOP

suggestion for the lay-out. The lathe stand is not a fixture, but it is a heavy item and it should not be necessary to move it about in the ordinary way.

Consequently there must be reasonable room between it and the bench. When long work has to pass across the saw it can project through the window, though it would always be possible to move the machine when any extent of timber had to be cut. When there is no car the layout is simple. The machine can be brought well down, and gives plenty of working room.

The notes about condensation apply equally in a garage. If this is made of corrugated iron or asbestos sheeting, some form of lining is essential, otherwise there will be continuous dripping from the roof and running down the walls in winter time. Of course, the only real answer to the problem is a continuous form of low heating, though even then lining is necessary to act as an insulation. In any case an unlined shop would be uncomfortably hot in summer as well as unduly cold in winter. Timber flooring over the concrete base also helps in keeping the garage warm.

STARTING AT THE BOTTOM: HOW TO PLANE WOOD

From our less experienced readers we have had a number of requests for articles explaining the more elementary processes in woodwork, and this should appeal to these readers. We trust, however, that to all it will be a sort of refresher course, and that the more experienced man will find in it plenty to interest and help him

THE plane may be used for various purposes: for truing a piece of wood, for reducing its thickness or width, or to make it smooth; and the particular use to which it is put may affect both the choice of plane and its setting. In many cases all three operations may have to be carried out, and we may therefore take a typical example, say, the preparation of a cabinet end, and see the way in which the work should be carried out.

Nowadays much wood is obtained ready machine planed, which means that it is already true (unless it has warped since being prepared) and has probably been thicknessed. However, we will start on the assumption that the wood is just as it has left the saw and requires working up from the rough, just noting in passing that machine-planed wood should be hand-planed before polishing.

Face Side. Assume that wood is to finish, say, 2 ft. 6 ins. long by 9 ins. wide by 7/8 in. thick. The wood in hand is probably just over 2 ft. 6 ins. by 9 1/2 ins. or so wide, and just under 1 in. thick. Select the better side of the wood for the face side and, putting it upwards on the bench, test with the straight-edge to see whether any parts are high. Test the length, width, and also the diagonal, as shown in Fig. 1. This will indicate where the plane has chiefly to be used. For instance, it is clear that, although it may appear reasonably straight in length, it shows a definite curve in the diagonal. This is shown in exaggeration to make it clear.

Traversing. The first operation is that of "traversing," in which the plane is used more or less diagonally across the wood. For this, in addition to the normal bench stop, a long stop is needed near the back of the bench. This can conveniently be a batten nailed to the bench as shown in Fig. 2. Use the jack plane, and set the back iron a bare 1/16 in. from the cutting edge so that the grain does not tear out badly. Work the plane as in Fig. 2, testing with the straight-edge to see that the plane removes shavings where the wood is high. All saw marks must be taken out.

Now, setting the plane rather finer and using preferably the trying plane, work from end to end *with* the grain. The plane, by reason of the truth of its sole, will automatically take out the high parts. At the beginning of the stroke press heavily down with the left hand, and, as the far end is reached, transfer the pressure to the right hand. This prevents the ends from being dubbed or rounded over. The operation is shown in Fig. 3.

Testing. Although the straight-edge gives a good indication of straightness, it is desirable also to use the parallel strips to see that the surface is not in winding. Place them across the wood as in Fig. 4 and sight them as shown. This will make it obvious where shavings may have to be removed. If these parallel strips are not available, bring the eye level with the wood and look across it towards the light. You can get a good indication in this way of whether the surface is true. It will be realised that it is necessary for the surface to be free from winding because, apart from its own accuracy being essential, it would otherwise throw out any

reading when squaring the edge. This is especially important when narrow pieces such as door rails, etc., are being planed, it may throw the joints badly out.

Thicknessing. The wood has now to be brought to an even thickness, and the gauge is set to the required thickness, or, as is more usually the case, it is set to the thinnest part of the wood. The latter is now planed to this gauge line. Begin by traversing as before, then plane *with* the grain. Use the jack and trying planes, not the smoother. The latter would be liable to dip into hollows owing to its short length. Remember that the gauge lines are a test of the edges only.

Squaring the Edges. Put a mark on the face side as in Fig. 5, and with the wood in the bench vice square up the edge, using the trying plane. Test for straightness with the straight-edge, and use the trysquare from the face side to see that it is square. Set the plane fine and remove shavings from the centre until the plane ceases to cut, then take

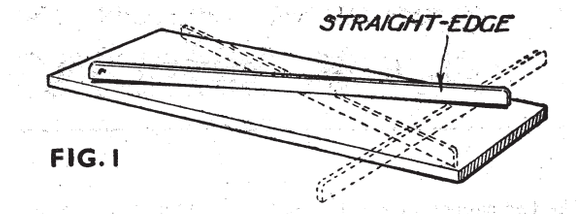

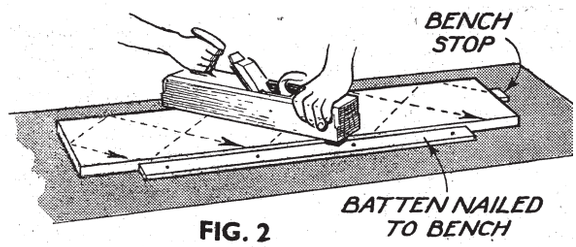

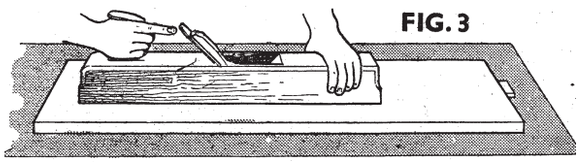

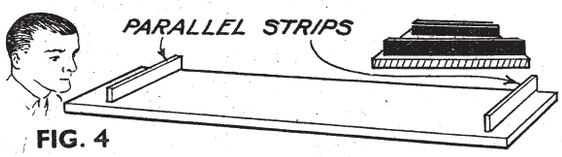

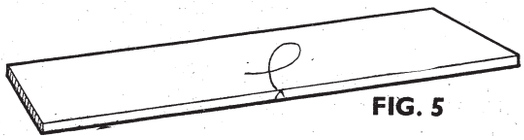

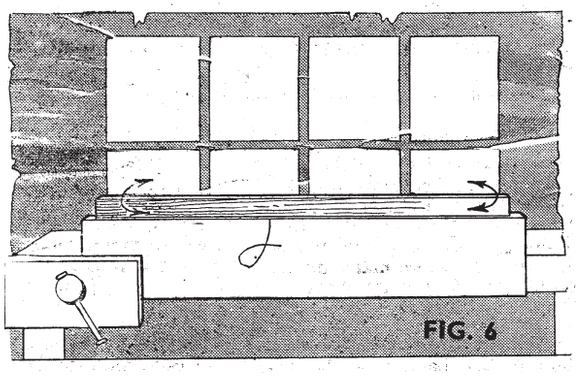

FIG. 1. TESTS MADE WITH THE STRAIGHT-EDGE

FIG. 2. TRAVERSING WITH THE JACK PLANE

FIG. 3. USING TRYING PLANE WITH THE GRAIN

FIG. 4. HOW TO SIGHT WITH PARALLEL STRIPS

FIG. 5. PENCIL MARKS USED TO DENOTE FACE SIDE AND EDGE

FIG. 6. USE OF STRAIGHT-EDGE TO TEST EDGE

FIG. 7. HOW EDGE, IF NOT STRAIGHT, AFFECTS TRUTH OF ENDS. DISTANCE A IS GREATER THAN 3

FIG. 8. TESTING EDGE WITH TRY SQUARE

Edge out of square can be corrected by shifting plane to one side as at A. Curve of cutting edge is exaggerated for clearness

FIG. 9. BOTH EDGE AND END SHOULD BE SQUARE

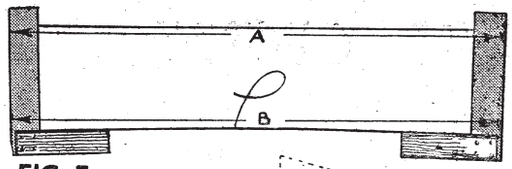

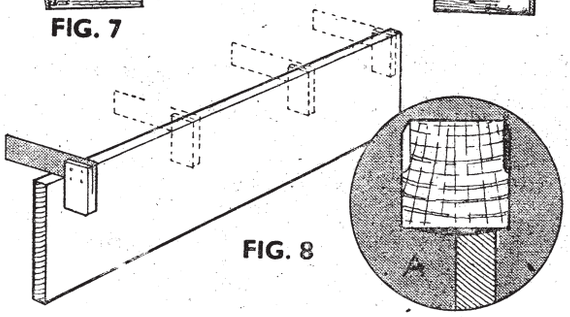

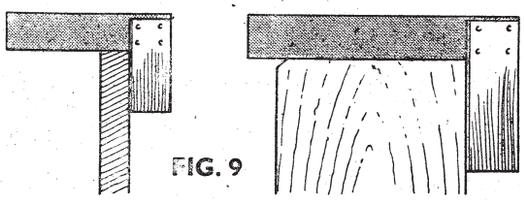

a couple of shavings right through. This will probably leave the edge straight, but test also with the straight-edge. Pivot the latter as suggested by the arrows in Fig. 6. If it does so freely it is a sign that the edge is round, a bad fault. Take off a shaving at the centre. The straight-edge should give slight friction at the ends. In any case, look towards the light when any gap will be revealed.

The necessity for a perfectly straight face edge is shown in Fig. 7 in exaggeration. If it is at all out it will throw the ends out of square when these are dealt with, and will result in the length at the back being greater or less than that at the front (see A and B). Follow the tip already given about pressing down with the left hand at the beginning of the stroke, and with the right hand when the far end is reached.

To test for squareness, use the trysquare from the face side, and pass the square along the edge as shown in Fig. 8. If it is at all out, do not rock the plane, but pass it over to the high side as shown at A, Fig. 8. It will thus remove a thicker shaving at this side owing to the slight curvature of the cutting edge. The fingers of the left hand should curl beneath the sole of the plane and touch the side of the wood, so acting as a fence in keeping the plane in the same relative position along its stroke. If the edge is square at one end and out at the other, the fingers can be gradually passed across the sole as the stroke is made, thus correcting the inaccuracy.

Ends and Back. Chisel off the rear corner at one end and, fixing the wood low in the vice, plane it straight and square. Test with the trysquare from the face edge to see that the edge is square with the face edge and also in its thickness (see Fig. 9). Now mark the finished length, square it across with the pencil, and, if there is much waste, saw off the surplus. When doing this have the face side upwards so that if the grain should splinter out it occurs at the back. Trim square as before with the plane.

If you have a panel gauge use this to mark the width. Otherwise use the rule with the finger held against the edge to act as a fence. Remove the bulk of the waste with the jack plane and finish with the trying plane.

Cleaning Up. The wood is now true in all respects, but it is not smooth enough for polishing. There are probably tears (pronounced "tares") where the grain has torn up, and there will be plane marks. These are taken out with the smoothing plane, but this is not done until after any joints, etc., have been cut. The reason for this is that the wood may be slightly bruised or marked during the process. In some cases it is desirable to leave the cleaning up until after any gluing up because joints may have to be levelled. Inner surfaces which cannot be planed afterwards should be dealt with, however. If both are to be cleaned up straightway, do the back first, because the surface lying on the bench may be slightly marked, and it is desirable that this should not be the face side.

Set the plane fine with the back iron as close as possible to the cutting edge, and go over the whole surface. It may be an advantage to plane in one direction owing to the grain sloping upwards, but often the slope of the grain may vary and a slight tearing out be unavoidable. These tears are taken out with the scraper which also removes plane marks. A thorough scouring with glasspaper wrapped around a cork rubber follows. Start with *middle* 2 or *fine* 2; and finish with No. 1. Work always *with* the grain.

FOR THE BEGINNER: USING THE PLANE

WHEN you first plane a piece of wood you are concerned more with making it true than with smoothing it. The latter follows later because it is easy to smooth a surface which is already true. Furthermore, since smoothing comes after such operations as joint cutting, it takes out any bruises and other marks which may have occurred.

First the truing. You do this progressively by making one surface straight, flat, and free from winding (called the face side); making one edge square with it and straight (called the face edge); and making the remaining surfaces straight and parallel and square with one or other of these. As an example, suppose you have a piece of wood about 2 ft. long by 9 in. wide, by ¾ in. thick. Select the better side and place the wood with this side upwards on the bench, or, if you have it, a planing board. The latter is just a plain piece of wood about ⅞ in. thick, perfectly straight and flat. The trouble with the bench is that it may not be flat, and, since you have to use quite a lot of pressure when planing, the wood may bend so that it is almost impossible to make it true. The planing board ensures that the wood lies on a flat surface.

Face Side. If the surface is rough start with the jack plane set fairly coarse, then use the trying plane set fine. You will soon find the advantage of two planes. It saves having constantly to reset a single plane, and it enables you to keep the trying plane sharp since it removes only a few fine shavings at the end. Hold the plane as in Fig. 1 with the left hand

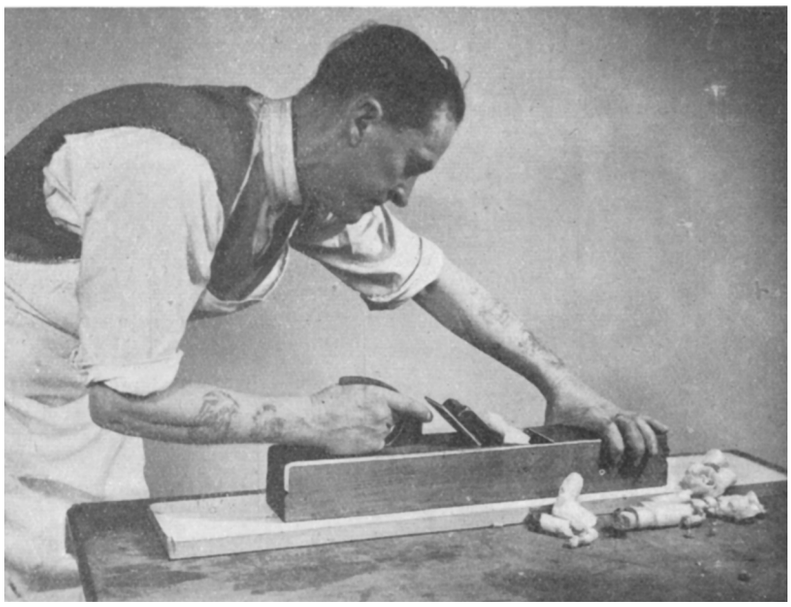

FIG. 1. USING THE TRYING PLANE TO TRUE A SURFACE. USE FIRM PRESSURE
Some workers point the finger of the right hand (as here) as when sawing. It is not so essential, however, as the plane is steadied and partly guided by the left hand, whereas the saw is held in one hand only

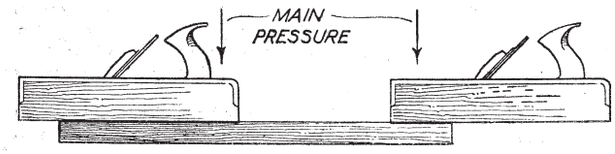

FIG. 2. WHERE PRESSURE IS APPLIED WHEN PLANING

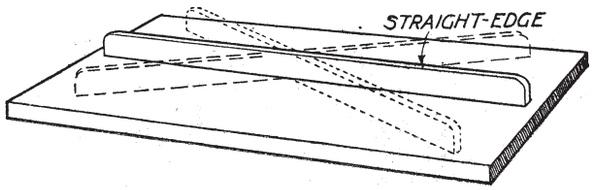

FIG. 3. USE OF STRAIGHT-EDGE TO TEST SURFACE

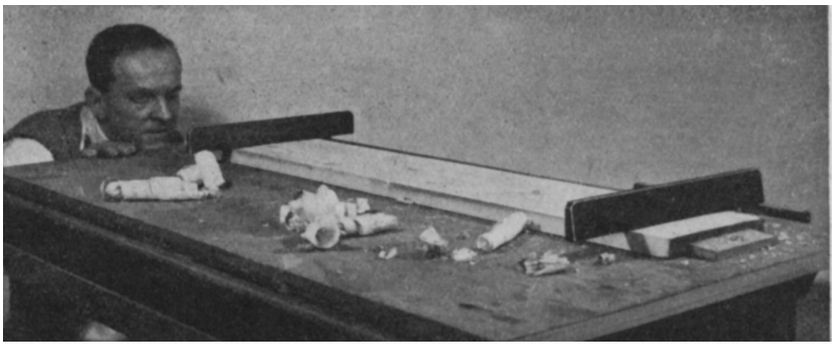

FIG. 4. SIGHTING THE PARALLEL STRIPS WHEN TESTING FOR WINDING
The strip farthest from the worker has an inlaid line, and this and the top edge of the near strip should appear parallel

astride the front, and press well down with this hand at the start of the stroke. As the far end is reached transfer the pressure to the right hand. This helps to avoid the fault that so many beginners develop; that of dubbing over the ends. It does so because the pressure is always directly over the wood as shown in Fig. 2.

It is a good plan to test for straightness with a straight-edge before using the trying plane. It will show you where shavings have to be removed, though once you have got used to it you can tell by the run of the plane where the high parts are. You will also want a try square, and if possible a pair of winding strips.

Here is a system that experience has shown to be sound when using the trying plane. Begin by removing shavings from the middle until the plane ceases to remove any more. You cannot make the wood unduly hollow, because, assuming that the plane is true, it will automatically cease to cut, since only the front and back of the sole will be touching the wood. Then take a couple of shavings right through, and in most cases the surface will be straight. However, test with the straight-edge, not only parallel with the length but also diagonally as in Fig. 3, and straight across. Try to twist the straight-edge. There should be definite friction at the ends. If it pivots freely about the middle it is a sure sign that the surface is round.

Testing for Winding. If you have winding strips use them as in Fig. 4. They are simply two pieces of wood with perfectly parallel edges, one with an inlaid line near the top edge. The latter is placed farthest from you on the wood. When viewed as shown the top edge of the near strip should line up with the inlaid line. If the line rises towards one end it shows that shavings need to be removed from that and the diagonally opposite corner. In this case the plane is used from corner to corner, though it is advisable to take shavings straight through afterwards.

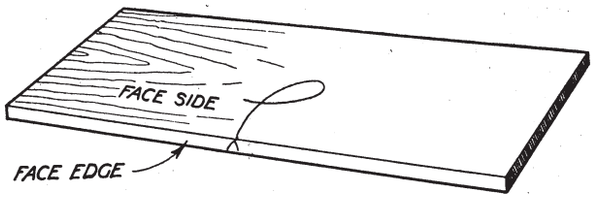

FIG. 5. HOW FACE SIDE AND FACE EDGE ARE MARKED

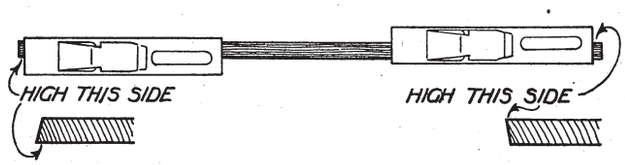

FIG. 6. PLANE PASSED FROM SIDE TO SIDE TO CORRECT AN EDGE WHICH IS IN WINDING

Should you not have any winding strips (you can make them yourself—they make excellent practice) hold the wood level with the eye and look straight across. You can detect any major inaccuracy. Then, since you know that the plane cannot make the wood too hollow, take a shaving diagonally first from one pair of corners, then from the other. If in one direction shavings are removed at the corners only it is clear that these are high.

Face Edge. You are now reasonably sure that the face side is true, and you can make a pencil mark on it so that there can be no question about it (see Fig. 5). Note that the mark touches the edge which is to become the face edge, and this is now attended to. If the wood is narrow, say not more than about a couple of inches, and is not too thin, you can stand it up on the bench when planing it. As in this case it is some 9 in. wide it is better to hold it in the vice; otherwise it may tilt over sideways.

Here you have two things to do; you have to make the edge straight, and you have to make it square with the surface you have already planed. Fig. 7 shows how to hold the plane with the fingers of the left hand passed beneath the sole. Here they bear against the side of the wood and so act as a sort of fence and help to keep the plane in alignment with the wood. The notes about transferring the pressure from one hand to the other apply equally here; also the point about removing shavings from the centre first. Test with the straight-edge, and if necessary remove shavings locally, afterwards taking a couple of shavings right through. Do not attempt to lift the plane bodily when you reach the end of where you wish to remove the shaving. Just raise the back of the plane with the right hand when the plane will immediately cease to cut.

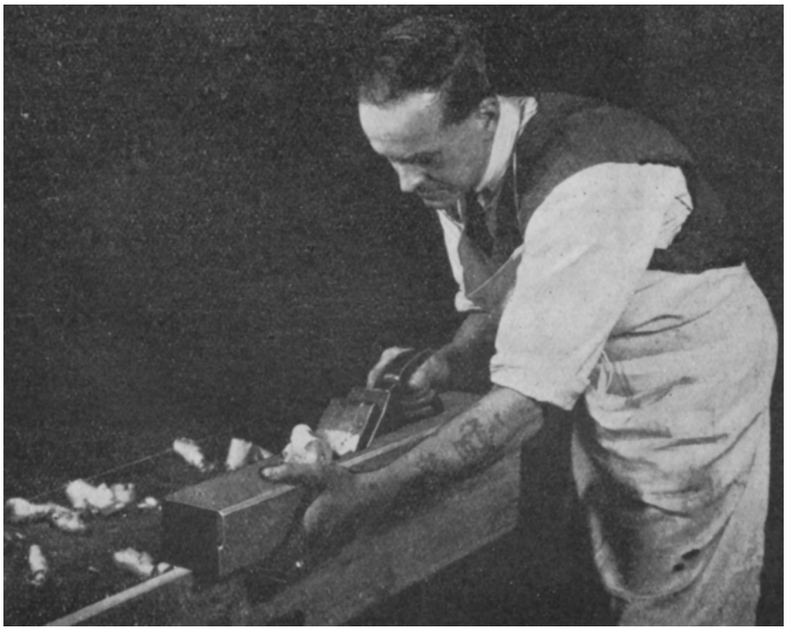

FIG. 7. HOW TO HOLD PLANE WHEN TRUING EDGE OF A BOARD
Note specially how the fingers of the left hand curl beneath the sole and bear against the wood. In this way they act as a sort of fence and keep the plane in line with the wood

Use of Try Square. When testing with the square, if you find that the edge is not square don't try to tilt the plane to correct it. Simply shift the plane over towards the high side as shown in exaggeration in Fig. 8. In this way the thickest part of the shaving is taken just where it is needed owing to the curvature of the cutter.

Possibly on testing with the try square you will find that one edge is high at one end and becomes low at the other.

To correct this start with the plane over at the high side and gradually bring it across to the other as the far end is reached as shown in Fig. 6. It is quite easy to do this if you slide the fingers of the left hand across the sole of the plane. Make sure first, however, that

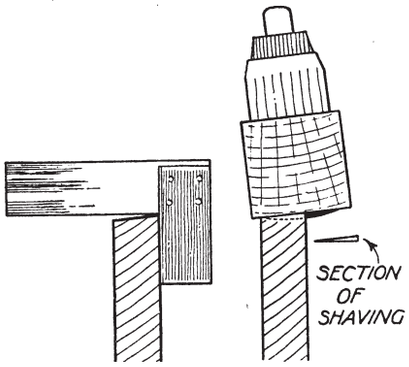

FIG. 8. CORRECTING EDGE OUT OF SQUARE
The plane is shifted to the high side so that the shaving is thicker at that side

the inaccuracy is not due to the face side being in winding. The latter would obviously cause it owing to the butt of the square being necessarily tilted. Remember that the square must be used from the face side in every case.

It now remains to finish the wood to thickness (if necessary) and to width. We say " if necessary " to thickness because most timber nowadays is bought ready thicknessed. However, if it is needed set a gauge to the thickness required or to the greatest thickness it will hold up, and mark all round with the fence bearing against the face side. If much has to be taken off use the jack plane and finish with the trying plane until the gauge line is just reached. Test as already described. The width is dealt with in much the same way.

The above gives the general principles of planing which can be applied to most jobs. There are other special jobs such as planing end grain, levelling joints, work on the shooting board, and so on, and we hope to deal with these later.

WHEN PLANING THIN WOOD

When you have to plane up a thin panel of wood you often find that the latter is inclined to jump about, making the planing awkward. Here is a simple device you will find handy. At the rear end of the planing board fix an old plane iron with a large screw. You have then merely to place the panel against the screws at the head, tap the iron at the back and tighten the screw. The slot allows sufficient variation for planing panels of different lengths. The edge of the iron bites into the wood just enough to hold it. Always remember to keep the screw heads well below the surface.

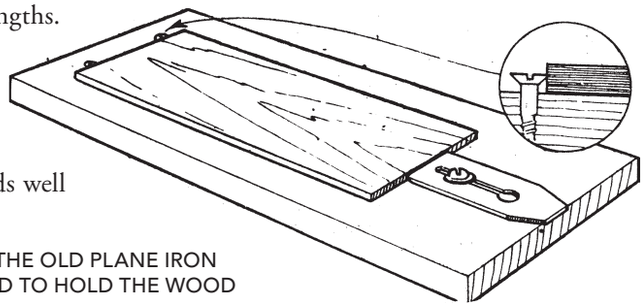

HOW THE OLD PLANE IRON IS USED TO HOLD THE WOOD

HANDLING THE JACK PLANE

It is reasonable to assume that most readers have their fair share of the creative instinct, otherwise they would not concern themselves with making things in wood. The spirit of craftsmanship draws its inspiration from this creative instinct, but, without some knowledge of technique and a certain facility in the handling of tools, creative activity is like a ship without its rudder. Technique and easy tool manipulation are essential if the greatest satisfaction is to be obtained from the creative urge. The object of this page is to provide useful information on technique, tool maintenance, and handling, etc.

To plane a piece of wood satisfactorily is one thing, but to plane the face-side flat in the minimum of time, taking off as few shavings as possible is a different proposition. The planing movement, Fig. 1 (A), shows the beginning of the planing stroke, where the pressure is mainly by the left hand on the toe of the plane. As the movement proceeds, pressure is gradually transferred to the right hand on the handle of the plane, as at (B). This transfer of pressure should not be completed until the handle is over the wood being planed. Pressure is thus always kept on that part of the plane which happens to be in contact with the wood at any stage of the movement. This ensures that an even shaving is taken off throughout the length of the wood.

Faults in the Plane. There are, of course, many possible faults in the plane itself which may lead to hard work in planing. A common one in a new plane is that shown in Fig. 2. The part of the sole (A) behind the mouth is slightly lower than the part (B) in front of it. The result is that the cutter will not touch the wood being planed, or, if lowered, takes off a very thick shaving and may tear out the grain. This difference in level between back and front of the sole is caused by downward pressure exerted by the wedge, and, when correcting

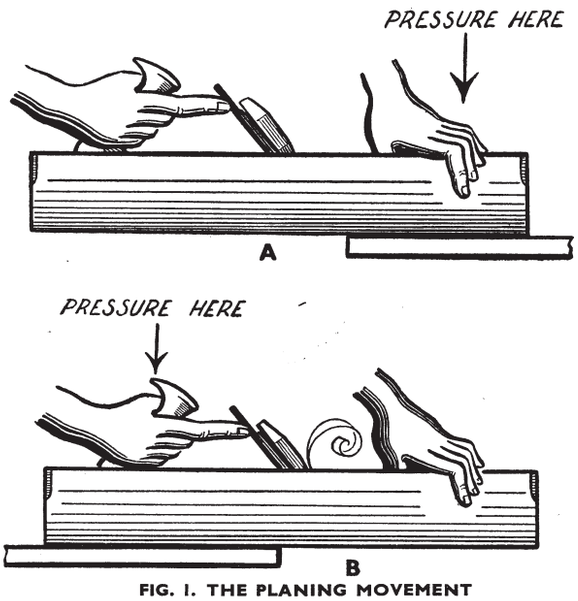

FIG. 1. THE PLANING MOVEMENT
A. Beginning of stroke—pressure is mainly by left hand on "toe" of plane
B. End of stroke—pressure with right hand on handle or "toat"

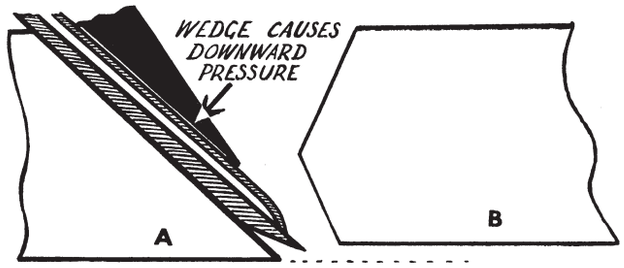

FIG. 2. DISTORTION CAUSED BY WEDGE THE CUTTER, ALTHOUGH PROJECTING BELOW FRONT EDGE OF MOUTH CANNOT TOUCH THE WOOD BEING PLANED

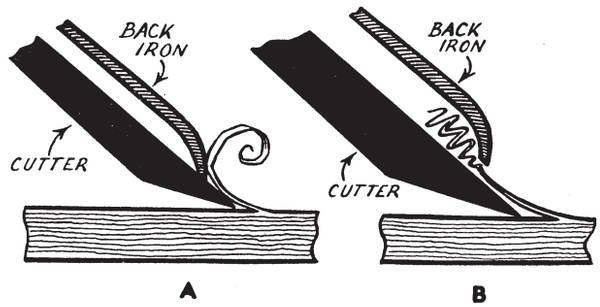

FIG. 3. THE BACK-IRON
A. When flush against cutter, shaving curls and is cleared from mouth of plane
B. When not flush, shaving becomes wedged

the fault by truing up the sole, the cutter, back-iron and wedge should all be firmly in position, except that the cutter is slightly withdrawn inside the mouth. This ensures that, during the truing up process, the same stresses are exerted on the sole as when the jack plane is in use.

The Back-iron. A final point often found in a new plane is that the lower tip of the back-iron is irregular, and therefore not flush against the cutting iron through out its width. Fig. 3 (A) shows the normal function of the back-iron in bending the shaving and making it curl. It is this function which helps to prevent the mouth becoming choked. (B) shows the result of even a slight gap at any point between the tip of the back-iron and the surface of the cutter. The shaving becomes wedged between the two, is no longer automatically cleared by the back-iron, and the mouth of the plane soon becomes choked. It is only the work of a few minutes, however, to remove the back-iron and file its tip flat.

THE PERFECT SURFACE

No doubt you have admired the beautiful finish of a high class piece of furniture or of a sideboard in which the effect is akin to that of a mirror. Without denying the skill of the french polisher, it must be remembered that it is only the perfect surface prepared by the cabinet maker that has made it possible. The polish is built up on this, and any imperfections in it show up and become magnified by the glaze of the polish. Here we describe how this surface can be prepared

JUST as a mirror depends upon the perfect flatness of the glass for the truth of its reflections, so a table top, or whatever it may be, relies for its effect upon the accurate and careful workmanship put into the cleaning up of its surface. Polishing gives it a shine but it cannot hide faults in the preparation—in fact, it makes them more obvious. A wavy surface gives distorted reflections, markings which are practically invisible when in the white immediately show themselves

after polishing, and tears (pronounced "tares") and other faults stand out as evidence of poor workmanship.

The work is one of stages, none of which can be omitted, and consists first of truing, then of smoothing. In the latter, each process takes out the marks left by the previous one. Thus there is first the truing with panel or trying plane, smoothing with the smoothing plane, scraping, and finally glasspapering, several grades of glasspaper being used in the latter, each successive one finer than that preceding.

Truing. It is hardly necessary to go into the initial planing of the wood. This would be done before any marking out, joint-cutting, or other working. It involves the truing of one side by traversing and then planing *with* the grain; testing with straight-edge and parallel strips. What we are concerned with is the cleaning up after all jointing and other working has been completed.

For an important part such as a wide table or cabinet top, even though originally trued, it is advisable to go over it with a finely set panel plane. You will realise that, whilst a smoothing plane will take out small inequalities, it will not take out large ones. This is because the plane is short and will therefore sink into a large depression whereas a longer plane would take out the high spots. Sharpen the cutter with very slight curvature and set it extremely fine. The back iron can be well up, say, between 1/32 in. and 1/16 in., so that there is no tendency to tear out the grain. You will soon detect any inequalities by the working of the plane, and you may find it desirable to work diagonally. Remember that the whole reason for this part of the work is to level large hollows or high places.

Smoothing Plane. The purpose of this plane is to reduce the surface to complete flatness, and to do so without tearing out the grain. This means that it must be set very fine and must have the back iron as close to the cutting edge as possible. If the plane has an adjustable mouth this should be as small as will give practical working. Much depends upon the wood being planed; some are difficult owing to a liability to tear out, but a plane in good condition and properly set will do its work leaving the surface practically free from tears.

* * *

Always use the scraper after the smoothing plane

* * *

In some woods there is no problem since the grain flows in the same direction throughout. An example is given in Fig. 1, from which it is clear that there is no liability to tear out providing it is planed in the direction shown by the arrow. Others are more complicated and the grain may vary in different parts as in Fig. 2. Note how the grain curves up and down at the edge (incidentally it is always as well to look at the edge as it is a useful indication of grain direction). Another awkward grain is that found in certain varieties of mahogany, padauk, and satinwood. The grain runs in narrow streaks varying for about 1/4 in. to 1 in. wide, and whilst one streak runs up, the other runs down. Thus in a single shaving parts of the cutter are working with the grain whilst others are working against it. The idea is shown in Fig. 3. It is thus clear that whilst some woods can be planed in one direction with advantage, others are as difficult one way as the other.

Fig. 4 shows in enlargement just what tears are like and how they are produced. As the shaving is raised it starts a split in the direction of the grain which is downwards, and this is continued until the shaving breaks when the process is repeated The closer the back iron to the cutting edge and the smaller the mouth the sooner the shaving breaks, and instead of there being widely spaced, large jagged "steps" there are small ones packed close together. The finer the plane is set the smaller the "steps" until they practically disappear altogether.

Fig. 5 shows the smoothing plane in use. Take it in fairly long strokes—as long as you can comfortably manage without moving your feet—and maintain a firm pressure, especially when dealing with hard timber. Take special care when beginning at the near end to start the plane with the tip of the sole flat on the wood as at A. This can be helped by pressing hard with the left hand. As the far end of the stroke is reached do not stop the plane abruptly but raise the heel as at B. In this way the shaving will taper off and the plane will not leave a bad mark.

Scraping. No matter how finely set the plane may be it is necessary to scrape the surface afterwards. There are two reasons for this. Firstly, some woods are so difficult that even the most finely set plane will cause a certain amount of tearing out. Secondly, a plane is bound to leave marks on the surface. This is largely due to the shape of the cutter. Even though only slightly round the resultant surface is bound to be in the form of a series of flat hollows. Some men advocate making the edge straight with just the corners taken off so that these hollows do not occur, but it is clear that, even in this case, there must be marks made by the rounded corners. The scraper takes out these marks and can also deal with tears. Give it a keen edge and use it as in Fig. 6. Every part of the surface must be scraped, but it is an advantage to work tears in the direction which best pleases them. It will be realised that the scraper is slightly bent when in use, and this enables even small, narrow tears to be treated locally.

Many men find it difficult to start the scraper at the near end of the wood. A hint is given in Fig. 7. Hold it diagonally so that part is already resting flat on the wood. This will enable a start to be made. It is frequently an advantage to keep the tool at an angle throughout, especially if there is an inlaid cross-banding around the edge.

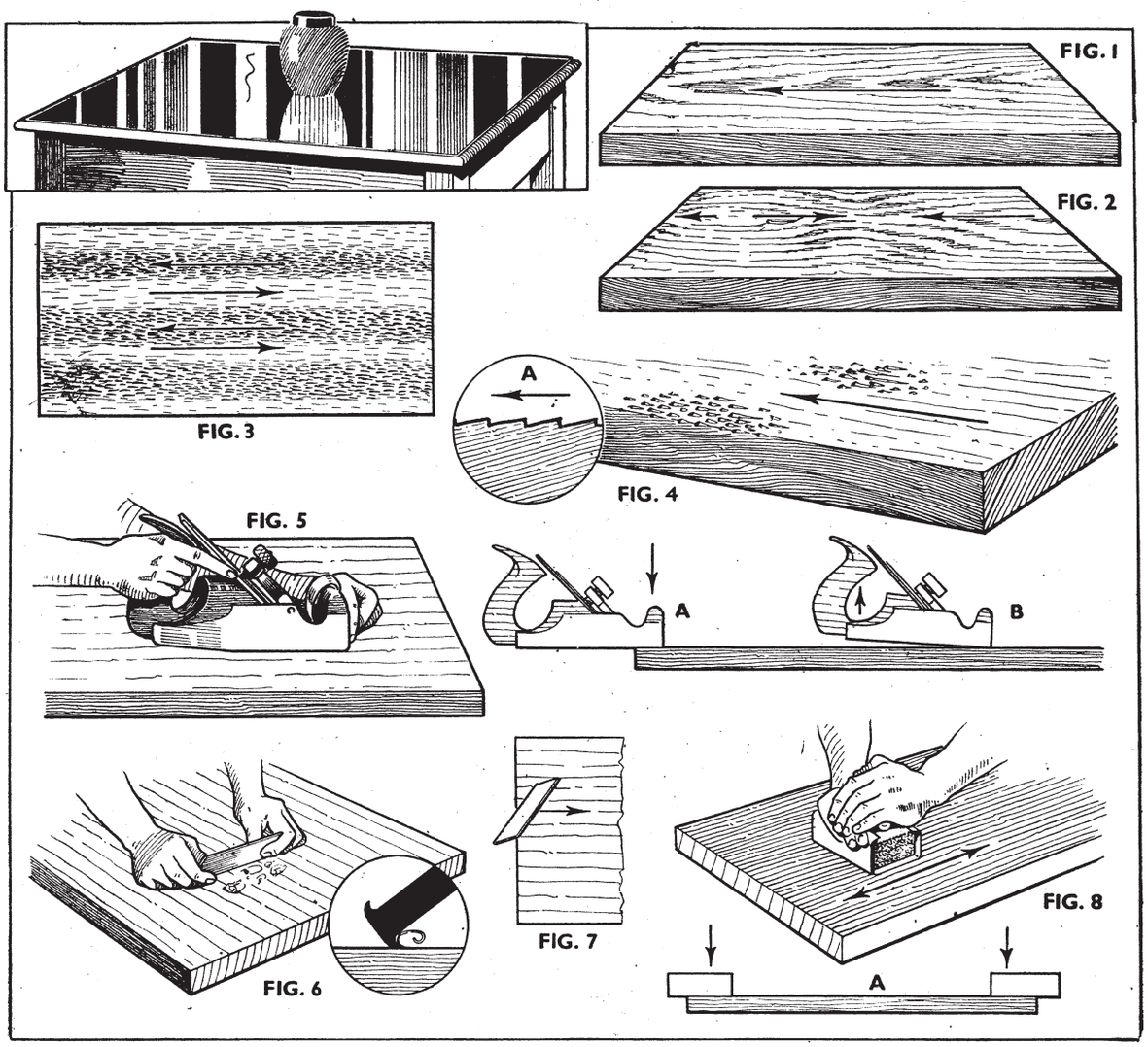

FEATURES TO BE NOTED WHEN CLEANING UP WOOD SURFACE

Glasspapering. This is the last process and is one which must not be skimped. Hold the glasspaper around a cork rubber, never loosely in the palm of the hand. The latter will only result in dubbed over edges and corners. Fig. 8 shows at A how the pressure must be varied as the edges are reached to ensure clean, flat corners.

The purpose of glasspapering is twofold; it is to take out any inequalities left by the scraper, and to give a smooth surface. This is accomplished by using a cork rubber so that any high places have heavier rubbing, and by using first a medium and then finer grade of glasspaper. The coarse grade takes out the inequalities, and the fine one removes the scratches of the coarse paper.

When dealing with the usual, straight-grained cabinet woods such as mahogany, oak, or walnut, *Middle* 2 glasspaper followed by No. 1½ is about right. If the grain is specially fine use *Fine* 2 followed by No. 1. Rub every part thoroughly, using two hands.

When possible work *with* the grain, but there are times when this cannot be done. An example is a built-up pattern in veneer, marquetry, or crossbanding. In this case you can only preserve one direction, this being usually in the direction of the grain of the greatest area. Use nothing coarser than *Fine* 2. Then again, some woods have no definite direction of grain; burr walnut for instance. For this you will have to use a circular movement. Start with No. 1, and finish with *Flour* grade. Scratches will then be invisible.

The reason for working *with* the grain is partly that the glasspaper scratches, in coinciding with the grain, are less noticeable; and partly that when glasspaper is used across the grain it causes any subsequent staining to be darker in such places. If, therefore, it were used with a circular movement on straight-grained wood the final appearance would be liable to be patchy.